ABBY LIGHTING

220V 240V 50/60Hz | CRI 80 | IP20 | L80B10 >50,000h | MacAdam Step 3

Optional: Dimmable | Tunable White | CRI 90

TownSquare P 90 | 50W

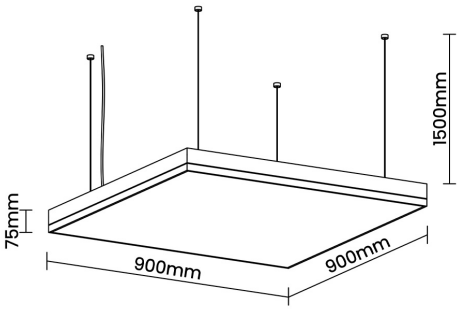

Product Reference

Environment Indoor

Installation Ceiling Suspended

Construction & Materials

Housing Extruded and Sheet Aluminium

Primary Lens -

Primary Reflector White Optics

Secondary Reflector -

Body Finish White,Black,Custom

Diffuser Opal PC,Microprismatic

Antiglare Baffle -

Thermal Management

Heat Sink Material Aluminium

Cooling Technique Passive Cooling

Optical System

Beam Direction General Diffuse

Tilt No

Swivel No

Electrical System

Driven with Constant Current Driver

Input Voltage/Hz 220V- 240V/50-60Hz

Control Gear Included

Mounting Integral

LED Power Watts 42.0W

System Power Watts 48.3W

Operating Voltage Vin 220-240 Vac

Power Factor p.f. > 0.95

Light Distribution

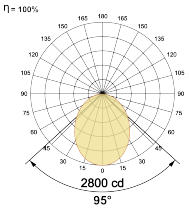

LED Technology

Binning 3 Step MacAdam

LED Life Time @ L80/B10 >50000 hours

Colour Rendering (CRI) CRI80,CRI90

Led Type SMD mid power

LED Fitted Samsung Mid power LED array 42V-48Vdc/1050mA

Controls

Standard Switchable On/Off

Optional DDIM,CASAMBI,Non Dimmable

Ordering Details

Code Example:	Name	Watt	CCT	CRI	Angle	Finish	Control
	TownSquare P 90	**50W**	**WW27K**	**CRI80**	**95°**	**SWH**	**On/Off**

Select one from each column with highlighted values to create the ordering code

NAME	WATT	LUMEN	EFFICACY	CCT		CRI	ANGLE	FINISH		CONTROL	
TownSquare P 90	**50W**	6182	128	2700K	**WW27K**	**CRI80**	95°	White	**SWH**	Non Dimmable	**On/Off**
		6376	132	3000K	**WW30K**	CRI90		Black	**SBL**	Dali Dimmable	**DDIM**
		6762	140	4000K	**NW40K**			Custom	**CSM**	Casambi	**CBTM**
		6955	144	5700K	**CW57K**						
				2700K-5700K	**TW**						
TownSquare P 90	**50W**			**WW27K**		**CRI80**	**95°**	**SWH**		**On/Off**	