ABBY LIGHTING

220V 240V 50/60Hz | CRI 80 | IP20 | MacAdam Step 3 | Swivel | Tilt

Optional: Bluetooth | Dimmable | CRI 90

Mojo 65 HGB MD | 20W

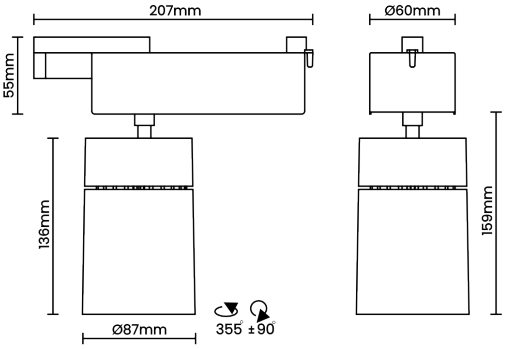

Product Reference

Environment Indoor

Installation Track Mounted

Construction & Materials

Housing Aluminium

Primary Lens -

Primary Reflector PC metallised

Secondary Reflector Anodised

Body Finish White,Black

Diffuser -

Antiglare Baffle -

Thermal Management

Heat Sink Material Die cast Aluminium

Cooling Technique Passive Cooling

Optical System

Beam Direction Adjustable

Tilt Yes

Swivel Yes

Electrical System

Driven with Constant Current Driver

Input Voltage/Hz 220V- 240V/50-60Hz

Control Gear Included

Mounting Integral

LED Power Watts 17.6W

System Power Watts 20.2W

Operating Voltage Vin 220-240Vac

Power Factor p.f. >0.95

Light Distribution

LED Technology

Binning 3 Step MacAdam

LED Life Time @ L80/B10 >50000 hours

Colour Rendering (CRI) CRI80,CRI90

Led Type COB

LED Fitted Cree COB LED 33V-36Vdc/500mA

Controls

Standard Switchable On/Off

Optional DDIM,BTTM,CASAMBI

Ordering Details

Code Example:	Name	Watt	CCT	CRI	Angle	Finish	Control
	Mojo 65 HGB MD	**20W**	**WW27K**	**CRI80**	**27°**	**SWH**	**DDIM**

Select one from each column with highlighted values to create the ordering code

NAME	WATT	LUMEN	EFFICACY	CCT		CRI	ANGLE	FINISH		CONTROL	
Mojo 65 HGB MD	**20W**	1838	91	2700K	**WW27K**	**CRI80**	27°	White	**SWH**	Dali Dimmable	**DDIM**
		1899	94	3000K	**WW30K**	CRI90		Black	**SBL**	Bluetooth Dimmable	**BTTM**
		2000	99	4000K	**NW40K**					Casambi	**CBTM**
		2040	101	5700K	**CW57K**						
Mojo 65 HGB MD	**20W**			**WW27K**		**CRI80**	**27°**	**SWH**		**DDIM**	

Abby Lighting & Switchgear Limited 802 A, Fortune Terraces, New Link Road, Opp City Mall, Andheri West, Mumbai - 400053, India.
frontdesk@abbylighting.com, +91 9833645212
www.abbylighting.com

Abby reserves the right to discontinue any product from its collection at any time whatsover and without prior notice